Wavelet Transform and its relation to multirate filter banks

Christian Wallinger

ASP Seminar 12th June 2007

Graz University of Technology, Austria

Outline

Short – Time Fourier – Transformation

- Interpretation using Bandpass Filters
- Uniform DFT Bank
- Decimation
- Inverse *STFT* and filter - bank interpretation
- Basis Functions and Orthonormality
- Continuous Time *STFT*

Wavelet – Transformation

- Passing from *STFT* to Wavelets
- General Definition of Wavelets
- Inversion and filter - bank interpretation
- Orthonormal Basis
- Discrete – Time Wavelet Transf.
- Inverse

• SHORT-Time FOURIER TRANSF.

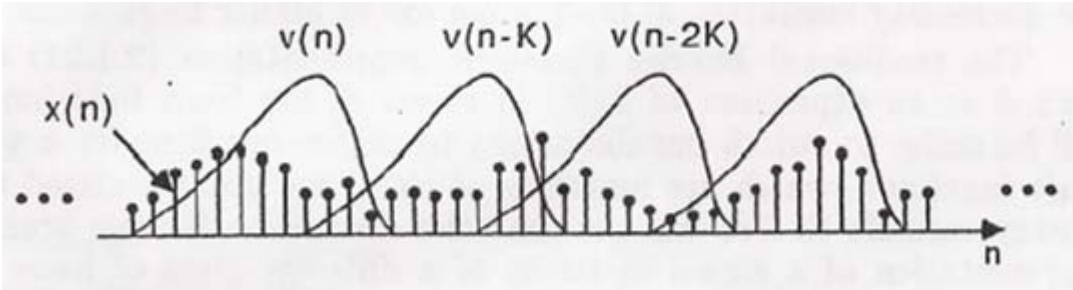

figure 1: *STFT processing in time*

time – frequency plot = Spectogram

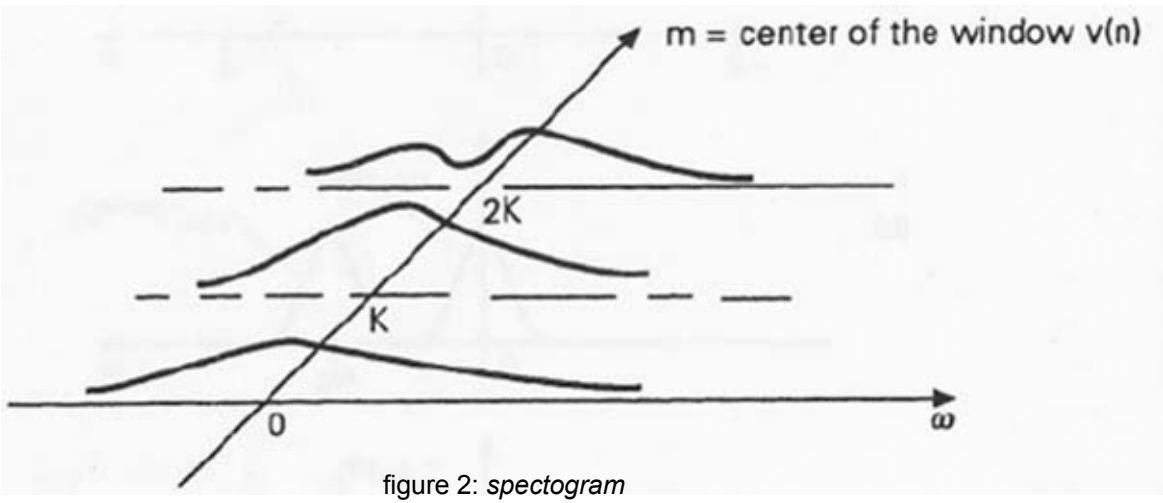

figure 2: *spectogram*

Definition:

$$X_{STFT}\left(e^{j\omega}, m\right) = \sum_{n=-\infty}^{\infty} x(n)v(n-m)e^{-j\omega n}$$

m . . . time shift – variable

(typically an integer multiple of some fixed integer K)

ω . . . frequency – variable $-\pi \leq \omega < \pi$

• *Interpretation using Bandpass Filters*

Traditional Fourier Transform as a Filter Bank

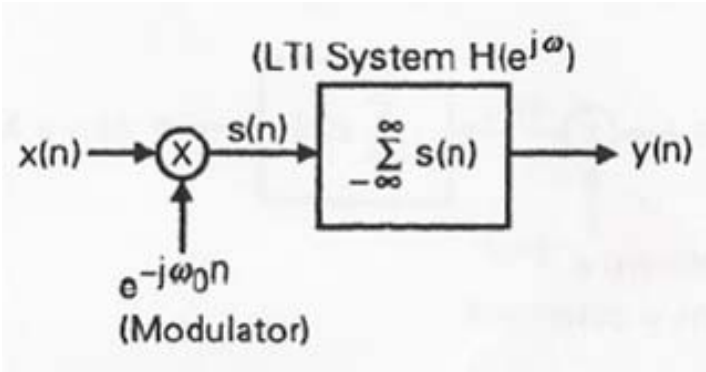

figure 3: Representation of FT in terms of a linear system

1. Modulator $e^{-j\omega_0 n}$ *:* → *performs a frequency shift*

2. LTI – System $H\left(e^{j\omega}\right)$ *:* → *ideal lowpass filter*

Why is $H\left(e^{j\omega}\right)$ an ideal lowpass filter ?

Impulse Response ***h(n) = 1 for <u>all</u> n***

$$\rightarrow \quad H\left(e^{j\omega}\right) = \sum_{n=-\infty}^{\infty} h(n) e^{-j\omega n} = 2\pi\delta_a(\omega) \qquad -\pi \le \omega < \pi$$

→ only zero - frequency passes

→ every other frequency is completely supressed

$$y(n) = X\left(e^{j\omega_0}\right) \qquad \text{for all } n$$

STFT as a Bank of Filters

→ *Expansion* of *Definiton* for further insight!

$$X_{STFT}\left(e^{j\omega}, m\right) = e^{-j\omega m} \sum_{n=-\infty}^{\infty} x(n) v(n-m) e^{j\omega(m-n)}$$

with:

$$v(n-m)e^{j\omega(m-n)} = v(-(m-n))e^{j\omega(m-n)}$$

→ Convolution of x(n) with the impulse response of the LTI – System $v(-n)e^{j\omega n}$

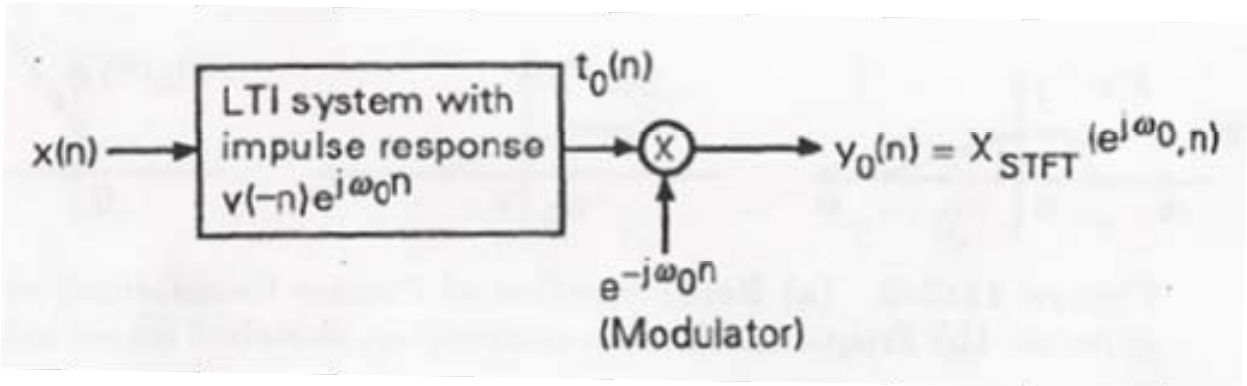

figure 4: Representation of *STFT* in terms of a linear system

In most applications, *v(n)* has a lowpass transform $V(e^{j\omega})$.

→

$$v(-n) \circ\!\!-\!\!\bullet\; V(e^{-j\omega})$$

$$v(-n)e^{j\omega_0 n} \circ\!\!-\!\!\bullet\; V(e^{-j(\omega-\omega_0)})$$

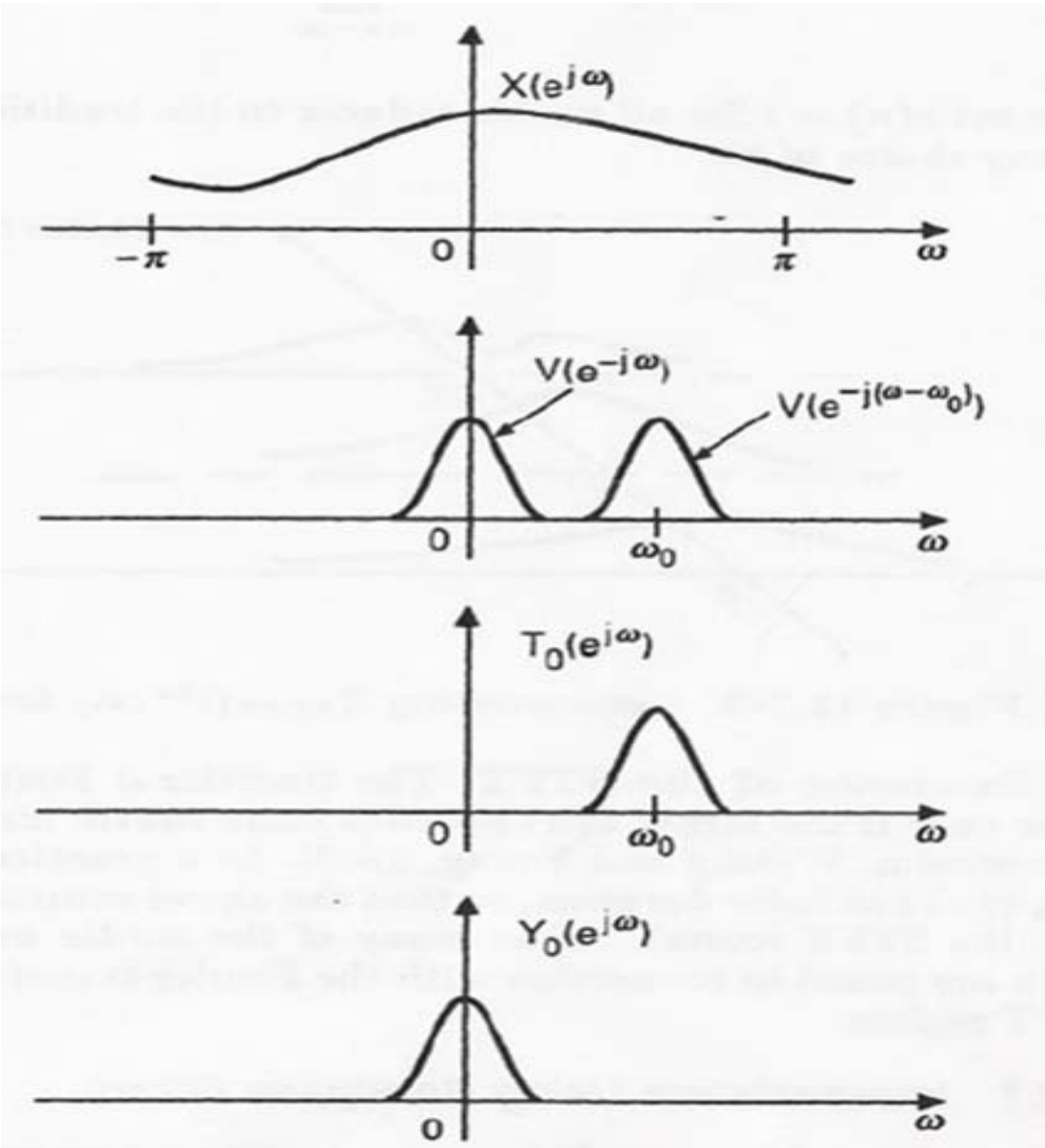

figure 5: Demonstration of how *STFT* works

In practice, we are interested in computing the Fourier transform at a discrete set of frequencies

$$\rightarrow 0 \leq \omega_0 < \omega_1 < \ldots < \omega_{M-1} < 2\pi$$

Therefore the STFT reduces to a filter bank with M bandpass filters

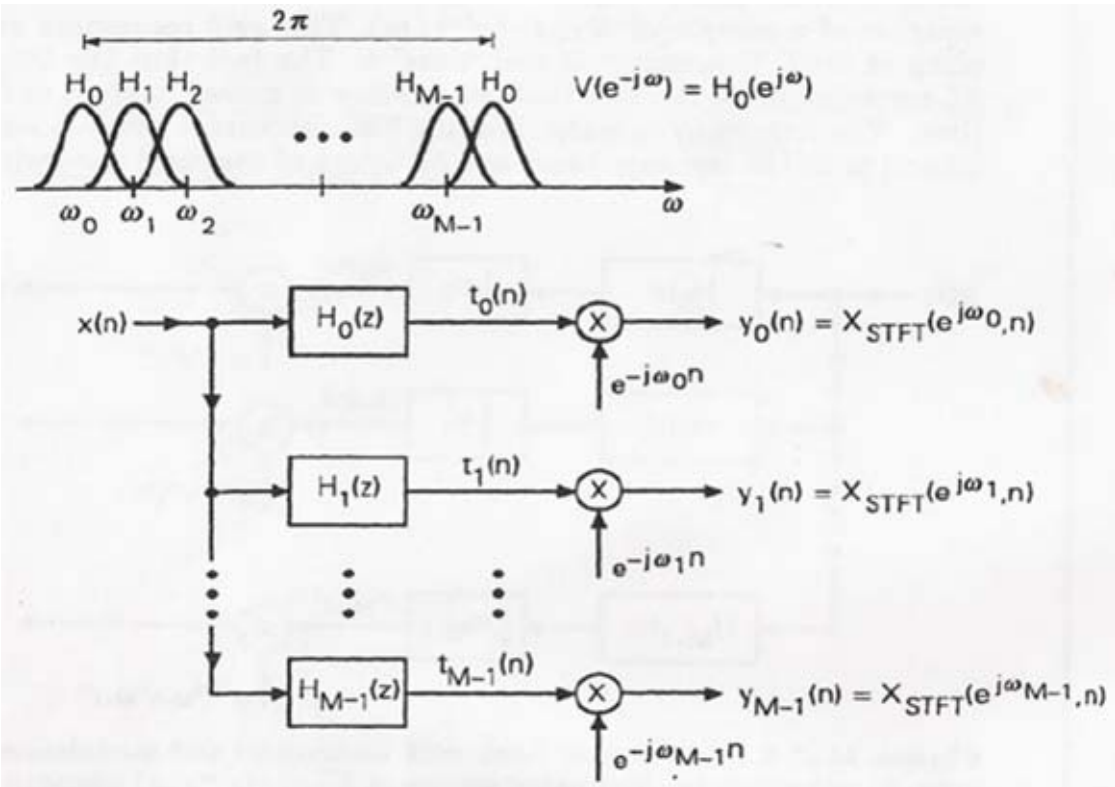

figure 6: *STFT* viewed as a filter bank

Uniform DFT bank

If the frequencies ω_k are uniformly spaced, then the system becomes the uniform DFT bank.

The *M* filters are related as in the following manner

$$H_k(z) = H_0\left(zW^k\right) \qquad 0 \le k \le M-1 \qquad W = e^{-j\frac{2\pi}{M}}$$

$$\rightarrow \qquad H_k(e^{j\omega}) = H_0\left(e^{j(\omega - \frac{2\pi}{M}k)}\right) \qquad H_0(e^{j\omega}) = V(e^{-j\omega})$$

→ The *uniform DFT bank* is a device to compute the *STFT* at uniformely spaced frequencies.

Decimation

if passband width of $V(e^{j\omega})$ is narrow

→ output signals $y_k(n)$ *are narrowband lowpass signals*

this means, that *yk(n)* varies slowly with time

According to this variying nature, one can exploit that to decimate the output.

Decimation Ratio of *M* = moving the window *v(k)* by *M* samples at a time

if filters have *equal* bandwidth

→ $n_k = M$

→ *maximally decimated* analyses bank

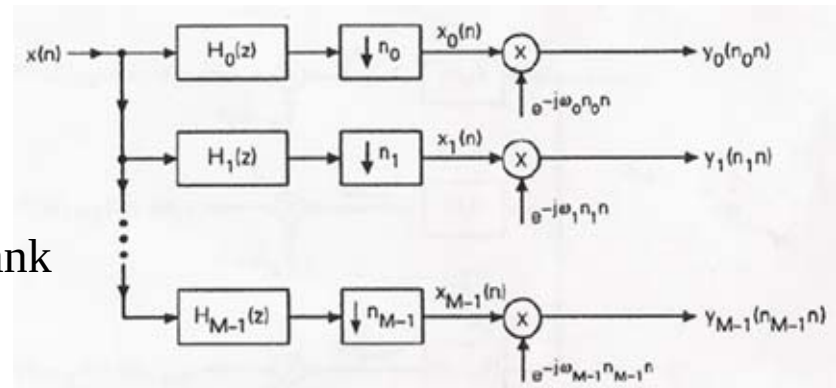

figure 7: Analysis bank with decimators

Time – Frequency Grid

Uniform sampling of both, '*time*' n and '*frequency*' ω

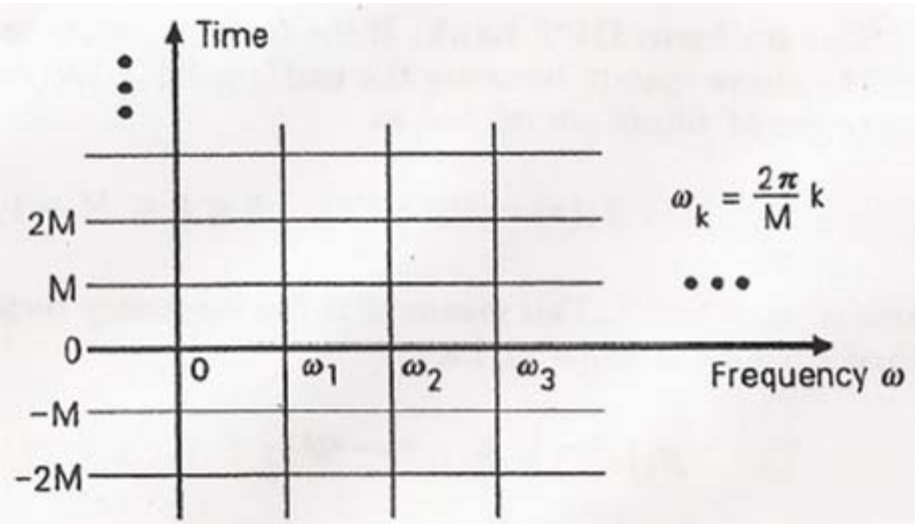

figure 8: time – frequency grid

Time spacing *M* corresponds to moving the window *M* units (= samples) at a *time*.

frequency spacing of adjacent filters $= \dfrac{2\pi}{M}$

Inversion of the STFT

From traditional Fourier – viewpoint

$X_{STFT}\left(e^{j\omega}, m\right)$ is the FT. from the time domain product

$$x(n)v(n-m)$$

→

$$x(n)v(n-m) = \frac{1}{2\pi}\int_0^{2\pi} X_{STFT}\left(e^{j\omega}, m\right)e^{j\omega n}\,d\omega$$

Another inversion formula is given by:

$$x(n) = \frac{1}{2\pi} \int_0^{2\pi} \left(\sum_{m=-\infty}^{\infty} X_{STFT}\left(e^{j\omega}, m\right) v^*(n-m) \right) e^{j\omega n} d\omega$$

which is provided by $\sum_m |v(m)|^2 = 1$

if $\sum_m |v(m)|^2 \neq 1$ but finite→ divide right side of the formula by $\sum_m |v(m)|^2$

but if window energy is infinite → one cannot apply this formulation

Filter Bank Interpretation of the Inverse

With $F_k(z)$ as synthesis - filter

Reconstruction can be done by the following synthesis bank:

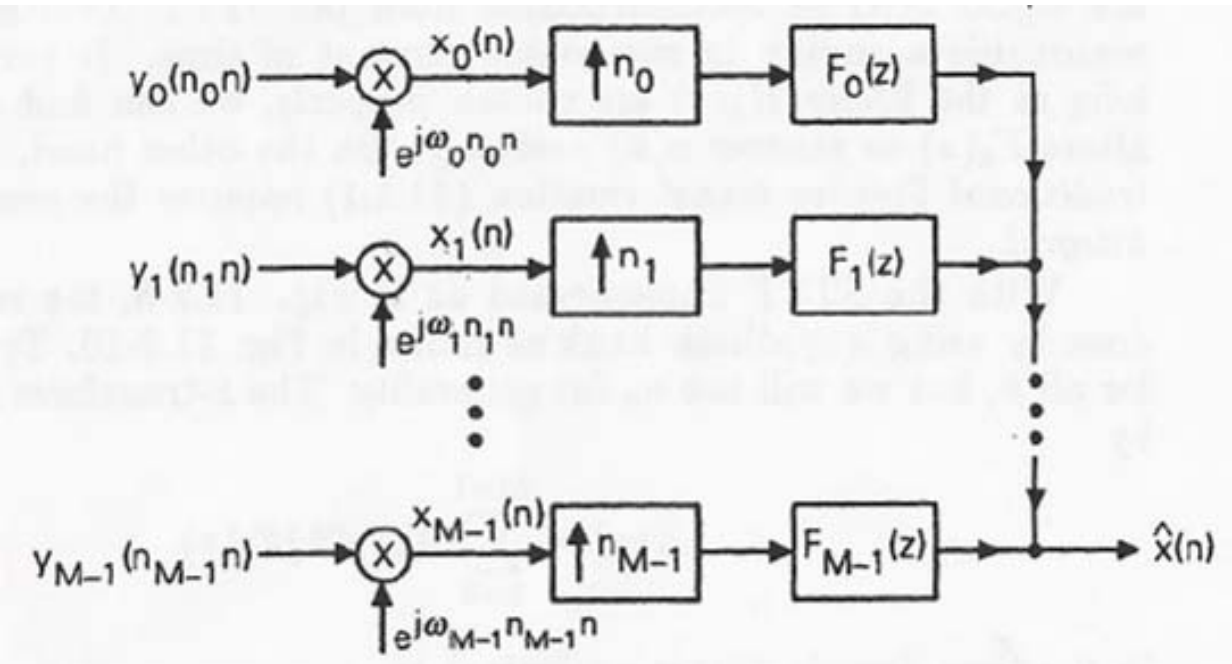

figure 9: synthesis – bank used to reconstruct x(n)

typically $n_k = M$ for all k

The *z – Transformation* of $\hat{x}(n)$ is given by

$$\hat{X}(z) = \sum_{k=0}^{M-1} X_k\left(z^{n_k}\right) F_k(z)$$

in t*ime* – domain

$$\hat{x}(n) = \sum_{k=0}^{M-1} \sum_{m=-\infty}^{\infty} x_k(m) f_k(n - n_k m)$$

$$= \sum_{k=0}^{M-1} \sum_{m=-\infty}^{\infty} y_k(n_k m) e^{j\omega_k (n_k m)} f_k(n - n_k m)$$

$$y_k(n_k m) \ldots STFT - Coefficien\ ts$$

Reconstruction is stable, if the filters $F_k(z)$ are stable!

Perfect reconstruction will be obtained, if $\hat{x}(n) = x(n)$

Basis Functions and Orthonormality

Functions of interest

$$\eta_{km}(n) \hat{=} f_k(n - n_k m) \ldots basis\ functions$$

For these double indexed functions (*basis functions* $\{\eta_{km}(n)\}$),
the orthonormality property means that

$$\sum_{n=-\infty}^{\infty} f_{k1}^*(n - n_{k1} m_1) f_{k2}(n - n_{k2} m_2) = \delta(k_1 - k_2)\delta(m_1 - m_2)$$

should be zero, except for those cases where $k_1 = k_2 \ and \ m_1 = m_2$

The Continuous - Time Case

Main points:

$$X_{STFT}(j\Omega,\tau)=\int_{-\infty}^{\infty}x(t)v(t-\tau)e^{-j\Omega t}dt \qquad (STFT)$$

$$x(t)v(t-\tau)=\frac{1}{2\pi}\int_{-\infty}^{\infty}X_{STFT}(j\Omega,\tau)e^{j\Omega t}d\Omega \qquad (inv.\ STFT)$$

$$x(t)=\frac{1}{2\pi}\int_{-\infty}^{\infty}\left(\int_{-\infty}^{\infty}X_{STFT}(j\Omega,\tau)v^{*}(t-\tau)d\tau\right)e^{j\Omega t}d\Omega \qquad (inv.\ STFT)$$

Choice of "Best Window"

***R**oot **M**ean **S**quare duration of window function v(t) in*

<u>time</u> domain D_t

$$D_t^2 = \frac{1}{E}\int_{-\infty}^{\infty} t^2 v^2(t)\,dt$$

<u>frequency</u> domain D_f

$$D_f^2 = \frac{1}{2\pi E}\int_{-\infty}^{\infty} \Omega^2 \left|V(j\Omega)\right|^2 d\Omega$$

with:

E . . . window energy $E = \int v^2(t)\,dt$

Uncertainty principle:

$$D_t D_f \geq 0.5$$

Iff Gaussian – window, this inequality becomes an equality !

Filter Bank Interpretation

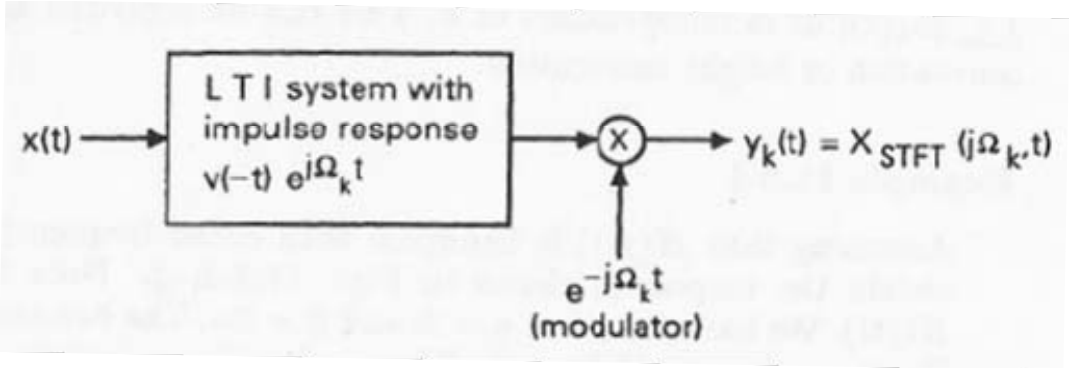

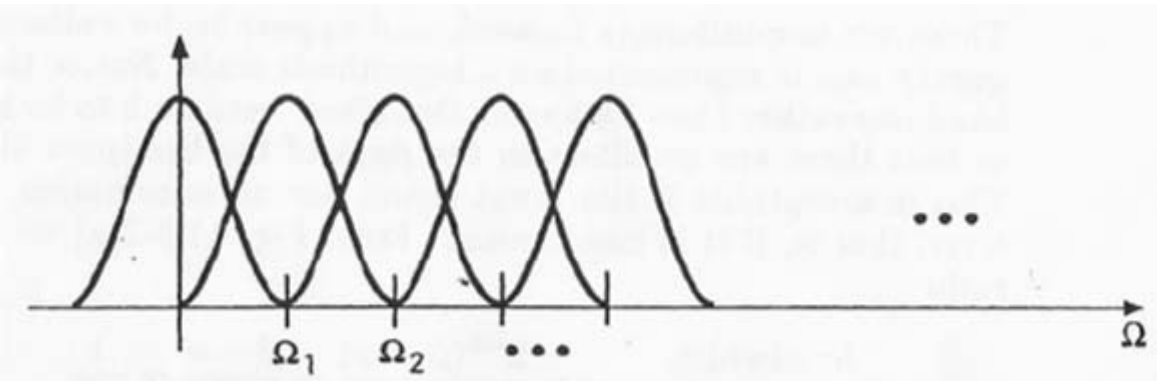

figure 10: continuous – STFT

• THE WAVELET TRANSFORM

Disadvantage of STFT

uniform time – frequency box $\left(D_t = const., D_f = const.\right)$

→ The accuracy of the estimate of the Fourier transform is poor at low frequencies, and improves as the frequency increases.

⇨ *Expected properties for a new function:*

- window width should adjust itself with 'frequency'
- as the window gets wider in time, also the step sizes for moving the window should become wider.

These goals are nicely accomplished by the ***wavelet transform*.**

Passing from STFT to Wavelets

Step 1:

Giving up the *STFT* modulation scheme and obtain filters

$$h_k(t) = a^{-k/2}\, h\left(a^{-k} t\right) \qquad a > 1 \ldots scaling\ \ factor,\ k = \mathrm{int}\, eger$$

in the frequency domain:

$$H_k(j\Omega) = a^{k/2}\, H\left(j a^k \Omega\right)$$

→ all reponses are obtained by *frequency – scaling* of a prototype response $H(j\Omega)$

Example:

Assuming $H(j\Omega)$ is a bandpass with cutoff frequencies α and β.

Also $a = 2,\ \beta = 2\alpha$ and the center frequency should be the geometrical mean of the two cutoff edges

$$\Omega_k = 2^{-k}\sqrt{\alpha\beta} = \alpha\, 2^{-k}\sqrt{2}$$

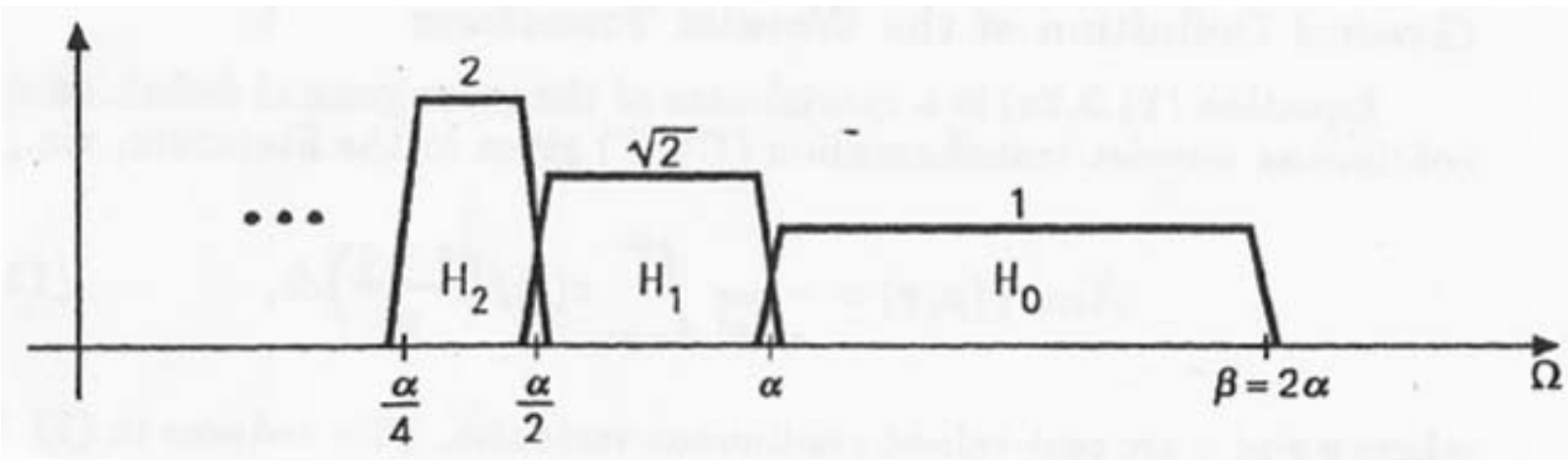

figure 11: frequency – response obtained by scaling process

Ratio:

$$\frac{bandwidth}{center-frequency\ \Omega_k} = \frac{2^{-k}\left(\beta-\alpha\right)}{2^{-k}\sqrt{\alpha\beta}} = \frac{1}{\sqrt{2}}$$

is independent of integer *k*

In *electrical filter theory* such a system is often said to be a *'constant Q'* system!

(Q ... Quality factor $Q = \frac{center-frequency}{bandwidth}$)

→ filter ouputs can be obtained by:

$$a^{-k/2}\, e^{-j\Omega_k \tau} \int_{-\infty}^{\infty} x(t)\, h\left(a^{-k}(\tau - t)\right) dt$$

Step 2:

$$k\uparrow \quad \rightarrow \quad bandwidth\ of\ H_k(j\Omega)\downarrow \quad \rightarrow \quad Samplerate\downarrow$$

or in *time* domain

$$k\uparrow \quad \rightarrow \quad window\ length\uparrow \quad \rightarrow \quad step\ size\uparrow$$

Therefore:

$$\tau = na^k T \qquad n \ldots \text{integer}, \quad a^k T \ldots \text{step size}$$

hence:

$$h\left(a^{-k}\left(na^k T - t\right)\right) = h\left(nT - a^{-k} t\right)$$

Summarizing, we are computing:

$$X_{DWT}(k,n) = a^{-k/2} \int_{-\infty}^{\infty} x(t) h\left(nT - a^{-k} t\right) dt$$

→

$$X_{DWT}(k,n) = \int_{-\infty}^{\infty} x(t) h_k\left(na^k T - t\right) dt$$

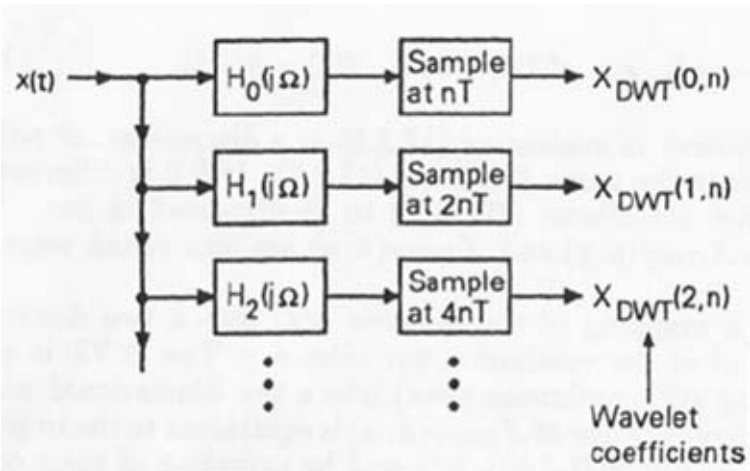

figure 12: Analysis bank of DWT

DWT...Discrete Wavelet Transform

Time Frequency Grid

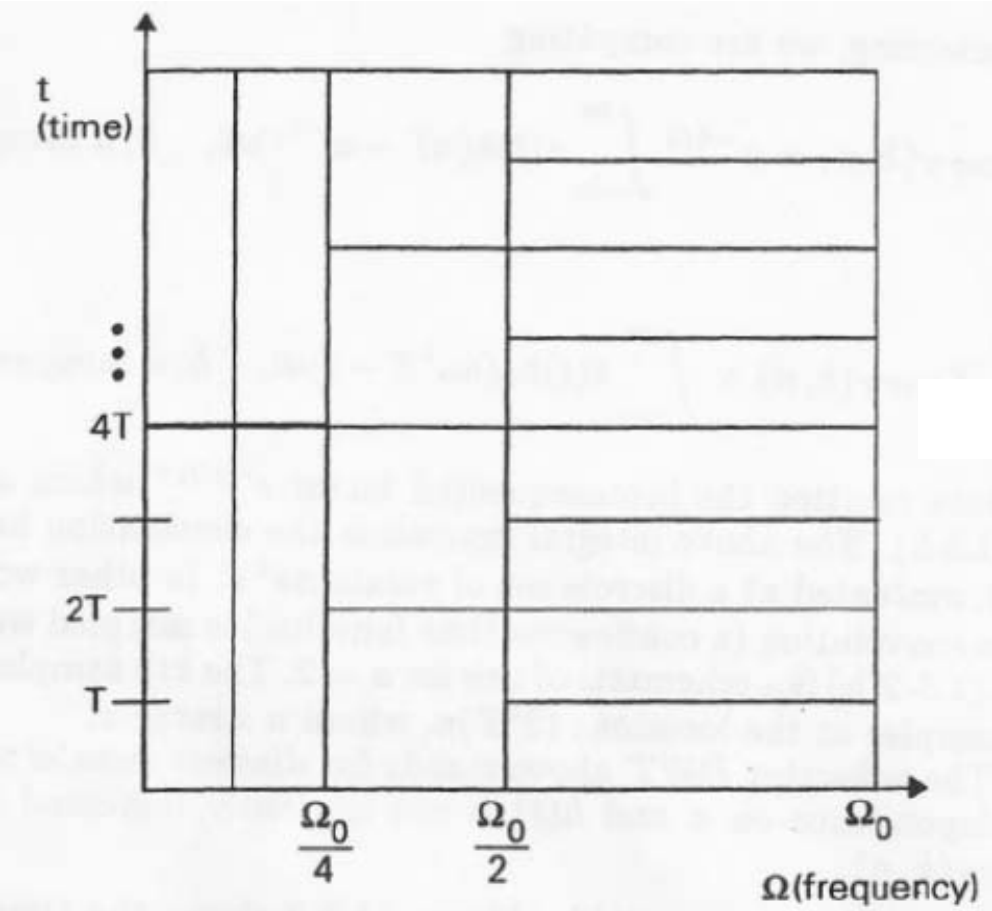

figure 13: time – frequency grid

$$D_t D_f = const.$$

General Definition of the Wavelet Transform

$$X_{CWT}(p,q) = \frac{1}{\sqrt{|p|}} \int_{-\infty}^{\infty} x(t) f\left(\frac{t-q}{p}\right) dt$$

p,q ... real – valued continuous variables

According to former definition:

$$p = a^k \qquad q = a^k Tn \qquad f(t) = h(-t)$$

$$X_{CWT}(p,q) \quad \textit{and} \quad X_{DWT}(k,n) \quad \ldots\ldots\ldots \quad \textit{wavelet coefficients}$$

Inversion of Wavelet Transform

$$x(t) = \sum_k \sum_n X_{DWT}(k,n)\psi_{kn}(t)$$

where $\psi_{kn}(t)$ are the basis functions

Filter Bank Interpretation of Inversion

Reconstruction of *x(t)* as a designing problem of the following synthesis filter bank

$X_{DWT}(k,n)$ … *sequence*

$F_k(j\Omega)$ … *continuous in time*

→ output of synthesis filter bank :

$$\hat{x}(t) = \sum_k \sum_n X_{DWT}(k,n) f_k(t - a^k nT)$$

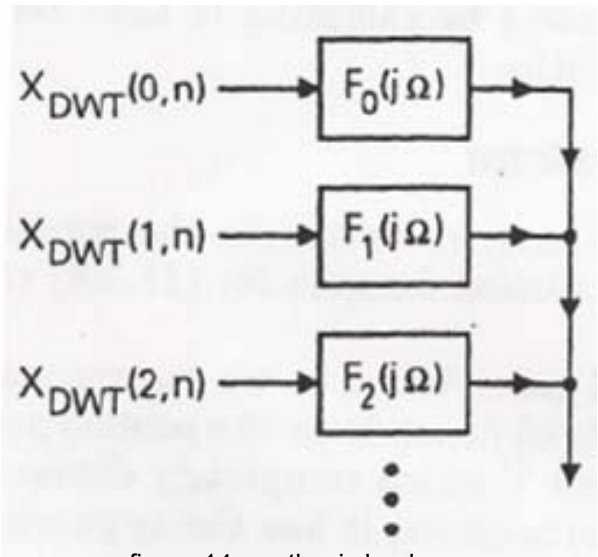

figure 14: synthesis bank

All synthesis filters are again generated from a fixed prototype synthesis filter *f(t) (→ mother wavelet)*

$$f_k(t) = a^{-k/2} f\left(a^{-k} t\right)$$

Substituting this in the preceding equation and assuming perfect reconstruction, we get

$$x(t) = \sum_k \sum_n X_{DWT}(k,n) a^{-k/2} f\left(a^{-k} t - nT\right)$$

with:

$$\psi(t) = f(t) \quad \rightarrow \quad \psi_{kn}(t) = a^{-k/2} \psi\left(a^{-k} t - nT\right) = a^{-k/2} \psi\left[a^{-k}\left(t - na^k T\right)\right] \ldots set\, of\ basis\ functions$$

using this, we can express each basis function in terms of the filter $f_k(t)$

$$\psi_{kn}(t) = f_k\left(t - na^k T\right)$$

Orthonormal Basis

Of particular interest is the case where $\{\psi_{kn}(t)\}$ is a set of orthonormal functions

Therefore, we expect:

$$\int_{-\infty}^{\infty} \psi_{kn}^*(t)\psi_{lm}(t)dt = \delta(k-l)\delta(n-m)$$

using Parseval's theorem, this becomes

$$\frac{1}{2\pi}\int_{-\infty}^{\infty} \Psi_{kn}^*(j\Omega)\Psi_{lm}(j\Omega)d\Omega = \delta(k-l)\delta(n-m)$$

and get :

$$X_{DWT}(k,n) = \int_{-\infty}^{\infty} x(t)\psi_{kn}^*(t)dt$$

Comparing these results, we can conclude:

$$\psi_{kn}(t) = h_k^*\left(a^k nT - t\right)$$

And in particular for *k = 0 and n = 0:*

$\psi_{00}(t) = \psi(t) = h^*(-t)$ → for the *orthonormal case* → $f_k(t) = h^*{}_k(-t)$

Discrete – Time Wavelet Transform

Starting with the frequency domain relation and a scaling factor *a = 2*

$$H_k\left(e^{j\omega}\right) = H\left(e^{j2^k\omega}\right) \quad \ldots \quad k \text{ is a nonnegative integer}$$

for highpass $H\left(e^{j\omega}\right)$ and *k = 1, k = 2*

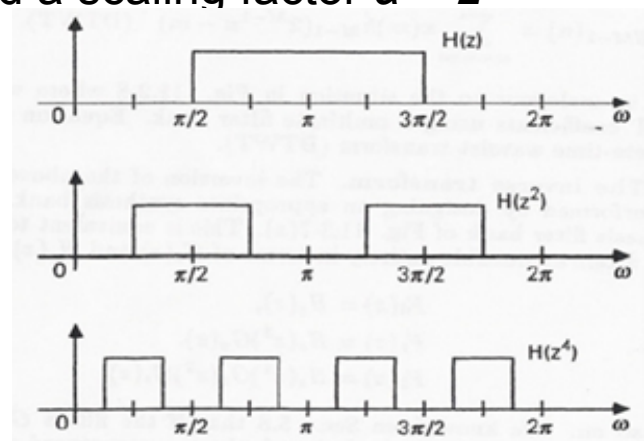

figure 15: Magnitude responses

Let *G(z)* be a lowpass with response

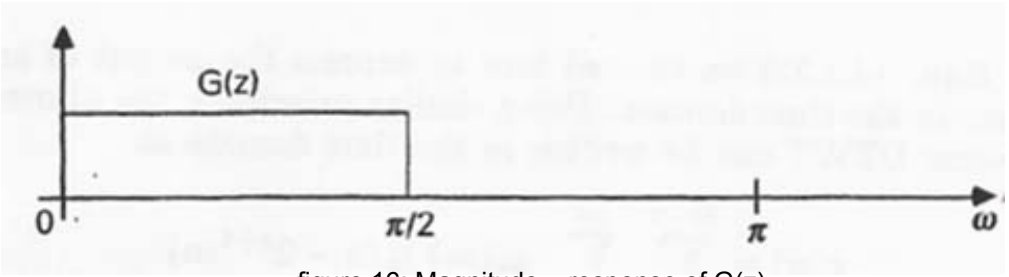

figure 16: Magnitude – response of G(z)

Using QMF – banks or its equivalent

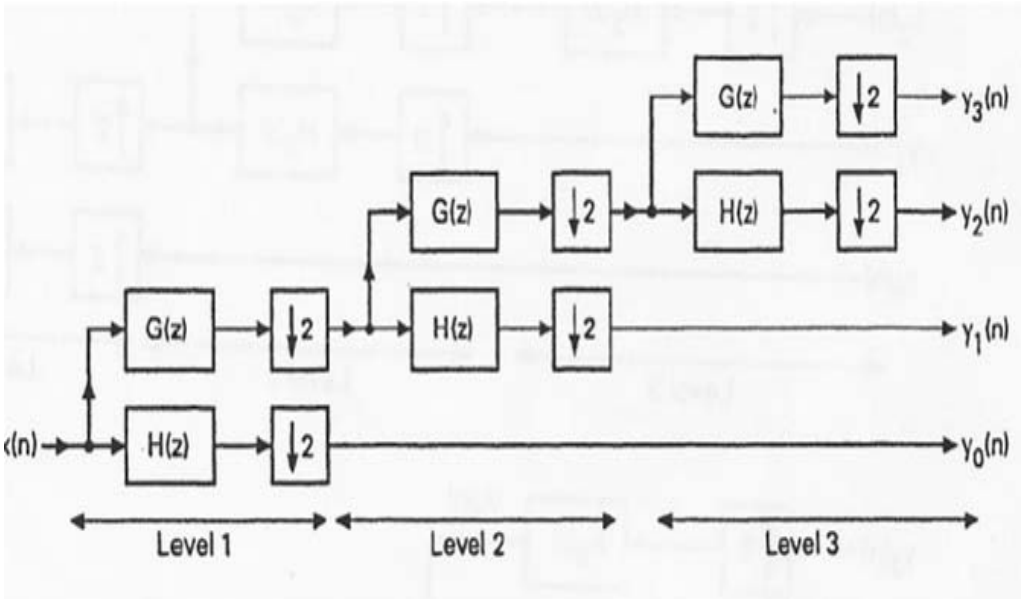

figure 17: 3 level binary tree-structured QMF

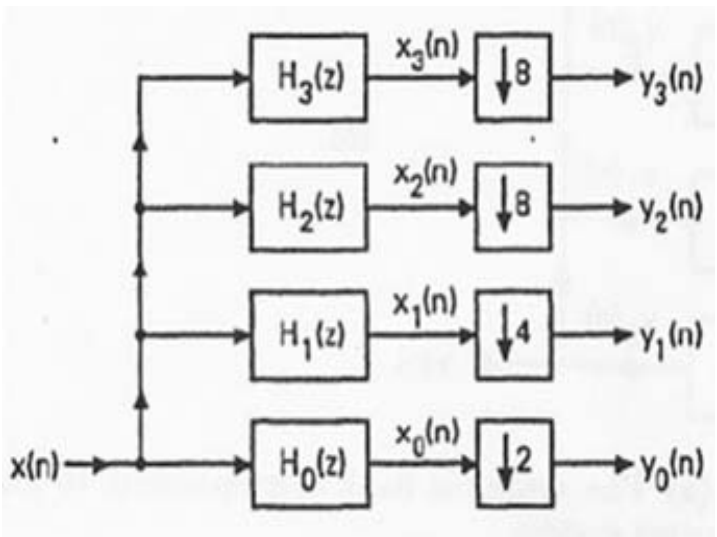

figure 18: equivalent 4-channel system

Responses of the filters $H(z), G(z)H(z^2), G(z)G(z^2)H(z^4), \ldots\ldots$

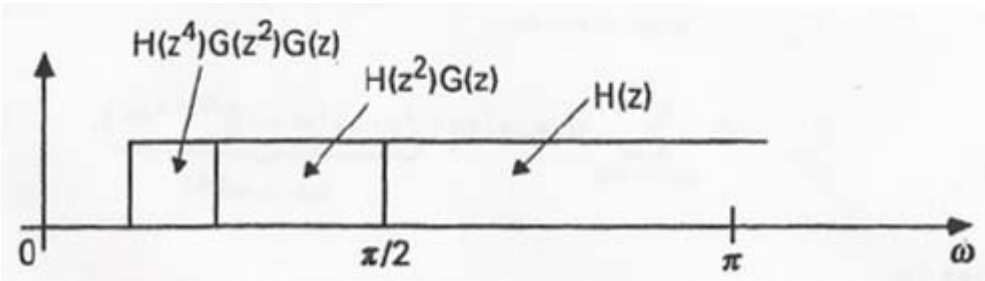

figure 19: combinations of H(z) and G(z)

Defining the Discrete –Time Wavelet Transform

$$y_k(n) = \sum_{m=-\infty}^{\infty} x(m) h_k\left(2^{k+1} n - m\right), \qquad 0 \le k \le M-2$$

$$y_{M-1}(n) = \sum_{m=-\infty}^{\infty} x(m) h_{M-1}\left(2^{M-1} n - m\right), \qquad \left(D_{iscrete} T_{ime} WT\right)$$

Inverse Transform

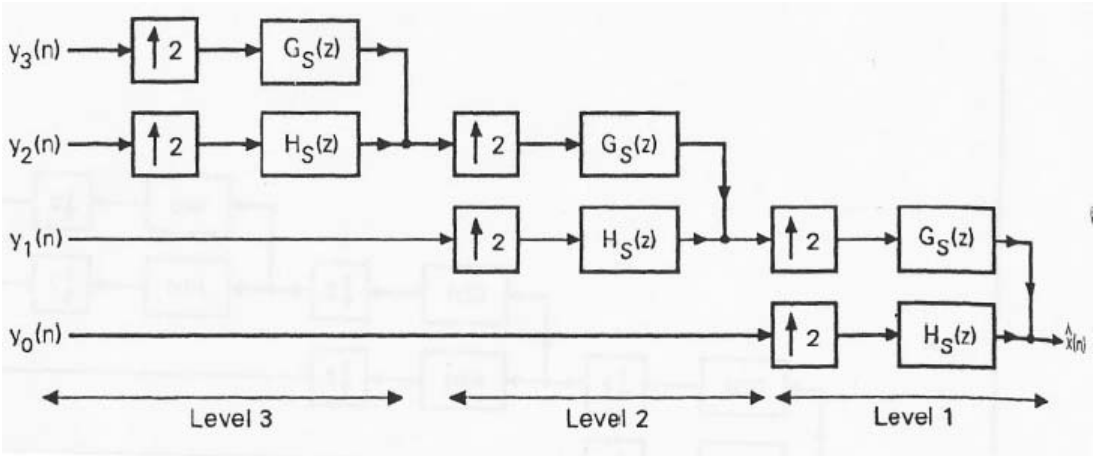

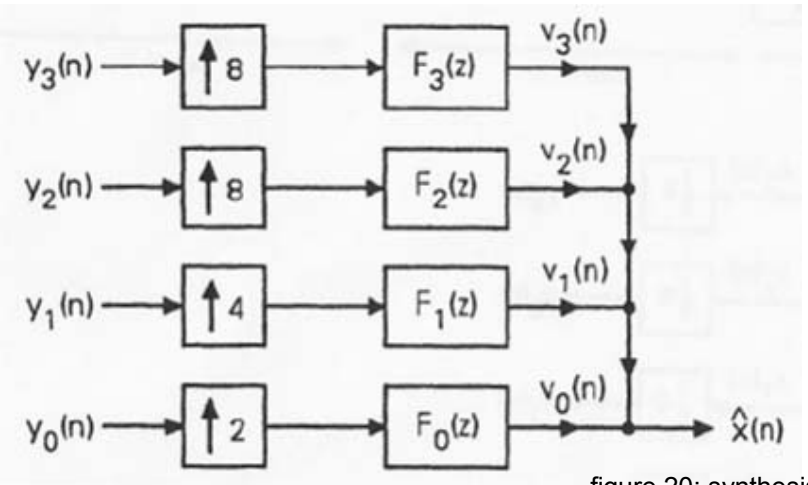

figure 20: synthesis filters

$$F_0(z) = H_s(z), \quad F_1(z) = H_s(z^2)G_s(z), \quad \ldots$$

For perfect reconstruction $\hat{x}(n) = x(n)$ we can express

$$X(z) = F_0(z)Y_0(z^2) + F_1(z)Y_1(z^4) + \ldots + F_{M-2}(z)Y_{M-2}(z^{2^{M-1}}) + F_{M-1}(z)Y_{M-1}(z^{2^{M-1}})$$

and in time domain:

$$x(n) = \sum_{k=0}^{M-2} \sum_{m=-\infty}^{\infty} y_k(m) f_k(n - 2^{2k+1} m) + \sum_{m=-\infty}^{\infty} y_{M-1}(m) f_{M-1}(n - 2^{M-1} m)$$

Main References

Multirate Systems and Filter Banks

(Prentice Hall Signal Processing Series)

by *P. P. Vaidyanathan*

Thank you for attention !